ANDORRA TELECOM

Andorra Telecom / Case Study

Andorra Telecom Increases Operational Efficiency and Improves Customer Satisfaction with Vitria's Operational Intelligence and Exception Management Solutions

To improve business results and achieve delivery of high quality telecommunication services, Andorra Telecom took action to increase operational efficiency and improve customer satisfaction. To achieve these goals, the company needed a solution that would provide visibility and insight into key business systems, be able to interact and share that information across the business, and address process exceptions quickly and efficiently.

Solution

Vitria´s Exception Management Solution rapidly manages and automates exceptions, initially with the Activation System, which reduces the manual intervention required to fix problems, thereby improving operational efficiency and effectiveness.

Vitria´s Operational Intelligence Solution provides real-time visibility into the activation system service orders, showing activation times and lists of potential exceptions, through a series of user-friendly, intuitive dashboards, with the ability to drill down to provide further insight into exceptions and other events of interest.

Vitria's Operational Intelligence Solution also delivers continuous real-time visibility and insight via Web 2.0 dashboards running over existing processes to monitor and control mobile phone or other types of recharges. Andorra Telecom leverages Vitria's Operational Intelligence platform, and professional services to deliver the required functionality on time and on budget.

Andorra Telecom's Mission

To offer innovative telecommunication services of the best quality and at the best price, guaranteeing a competitive advantage for Andorra.

Improving the quality of life for our residential customers and the competitiveness of businesses and institutions, managing the most advanced Information and Communication Technology with a committed human team, making Andorra Telecom an international point of reference.

A Strategy Based on 6 Lines

- Ensuring excellence in customer service
- Offering maximum quality of service at the best price
- Maintaining optimum profit levels
- Promoting socio-economic development in the Principality
- Acting as a technological partner for the country's businesses
- Consolidating a committed and motivated working team

Business Profile:

Andorra Telecom offers integrated and universal telephone, Internet, and television services as well as practical solutions for businesses.

Andorra Telecom is also responsible for managing the technical infrastructure and national broadcasting networks for radio and television, both analogue and digital (TDT).

Andorra Telecom manages and operates exclusively in the territory of the Principality, all kinds of integral services relating to telecommunications: i.e., telephone, television, and Internet.

Andorra Telecom is constituted as a public law entity, with its own legal personality and autonomous organization.

Andorra Telecom is controlled and managed by a Board of Directors with full responsibility to the Government of Andorra.

Andorra Telecom was formed as a public company in 1975.

VITRIA®

Andorra Telecom offers a broad catalogue of integral products and services, marketed under the brand name SOM:

- **SOM Fixed Telephone**
- **SOM Mobile Telephone**
- **SOM Telephone + Internet + IP Television**
- **SOM Internet**
- **SOM Optic Fibre**
- **SOM Data Centre**
- **SOM Data Services for Businesses**
- **SOM Advertising/Directory**

Main Project Challenges Accomplished

- Implemented Vitria´s Exception Management Solution to normalize and centralize the exception lifecycle resolution process.
- Implemented Vitria´s Operational Intelligence Solution in order to build superior real-time dashboards over the Activation System for better visibility, insight, and the ability to facilitate results-oriented action over the activation service orders, possible exceptions, and manual end user tasks. Dashboards are integrated within the corporate portal.
- Utilized Vitria´s M3O Operational Intelligence platform to build real-time dashboards over existing ATM management processes, to monitor mobile recharge movements in order to examine time periods of highest consumption, to view amounts consumed aggregated by entity, and so on. Also from an accounting point of view, billing information is matched with the banks providing the service.
- Deployed on time, new exception resolutions are generated by the Activation System, implementing new actions in the form of BPMS resolution processes, providing improved agility and velocity.
- Provided a stable unified and integrated solution covering the complete OSS and BSS integration aspects, exception detection and resolution, visibility, insight, and pro-active automated or semi-automated action. End user solutions are integrated within a corporate portal environment.

Architecture

Andorra Telecom collects orders using Siebel's CRM application, manages billing with Geneva Billing System, and provisions and activates services with Vitria process models developed to support the multiple services delivered to the customer's home. Vitria's platform is the engine that allows processes to run across these systems with a minimum of human interaction, a high degree of visibility, and a lack of disruptions.

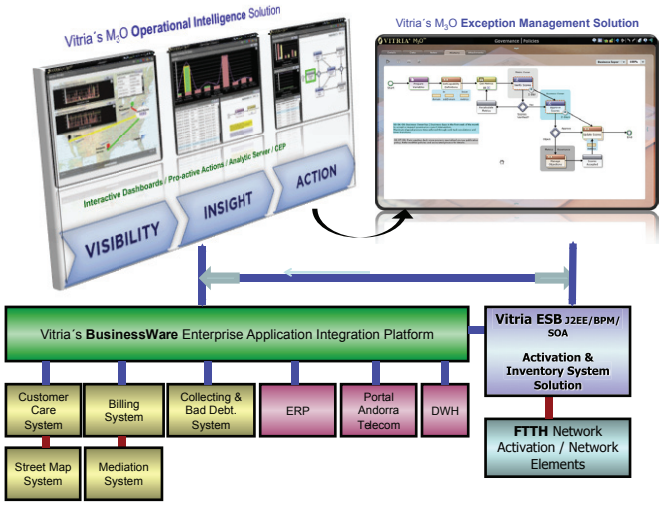

Andorra Telecom's approach supports a process-centric model for the BSS and OSS systems which is far superior to the data-driven approach of standalone transactional applications.

Andorra Telecom Exception Management dashboard samples over the Activation System.

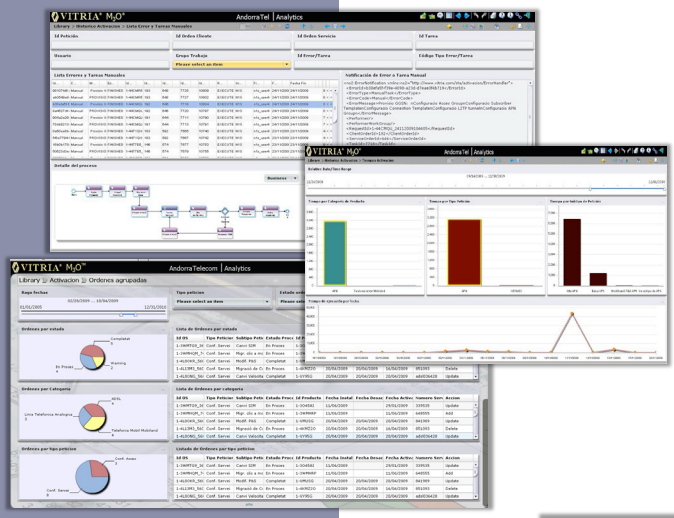

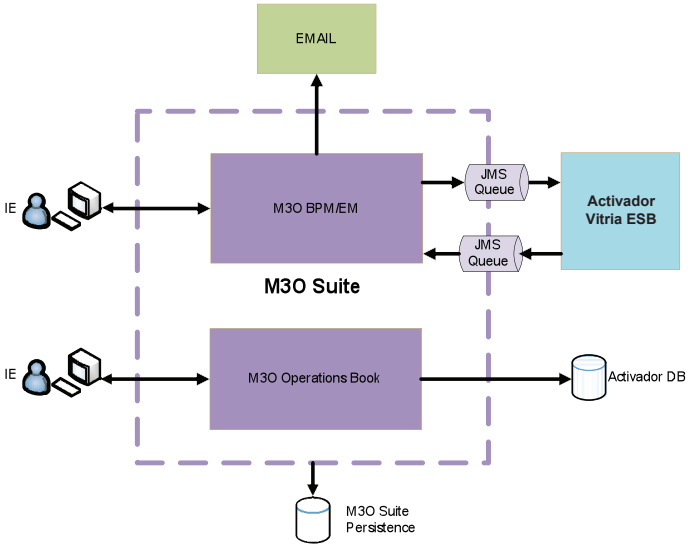

Andorra Telecom enriched the existing integrated and unified infrastructure providing visibility, insight, and action over the Activation System, as well as a unique Exception Management Solution to cover the lifecycle of the potential Activation exceptions.

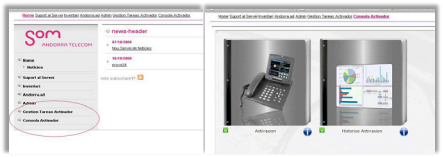

End user Exception Management dashboards, and corporate portal integration.

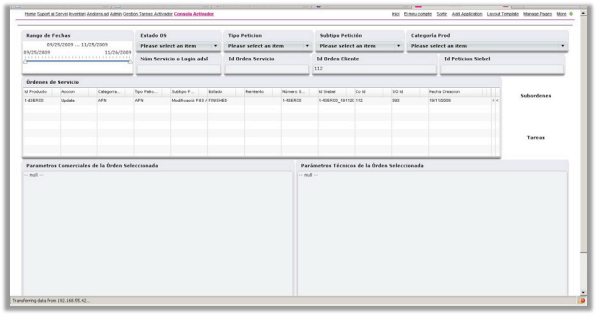

Andorra Telecom ATM Mobile Recharges dashboards and sample Portal integration.

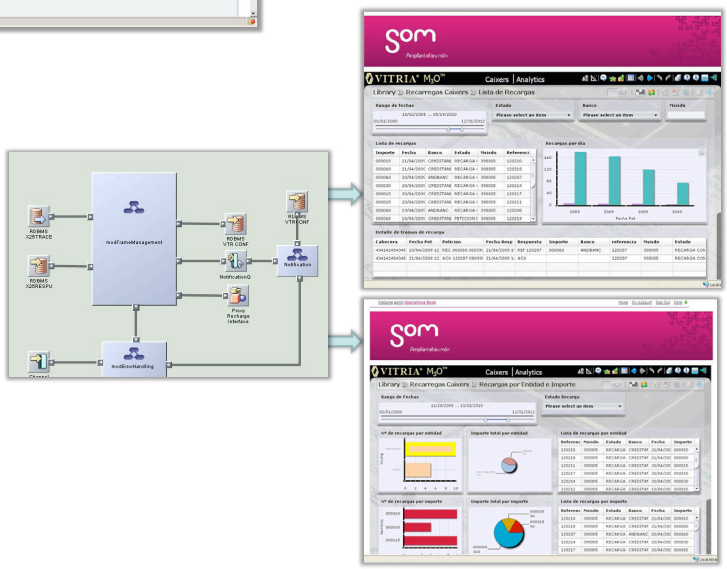

"We have selected Vitria´s Operational Intelligence Solution because of its dashboards, and it allows us to access and monitor layers in different projects, in real time. The end user has much more visibility over the critical metrics and actionable capacity over the corresponding processes."

- Albert Pubill
CIO, Andorra Telecom

The Result: High Availability, High Customer Satisfaction

The results of the on-time, on-budget implementation so far have been impressive. Andorra Telecom is achieving 88% automation for corporate customers and 96% automation for residential customers at very high volumes. As the processes for new services mature, they expect to reach a 100% rate of automation for customer services. As the company grows, these automation achievements will allow revenue to scale without associated cost increases.

The results have been positively reflected within Andorra Telecom's service level agreements. On average each order requires only 23 minutes for processing which includes network inventory updates, network activation and billing, and customer appointment setting. Changes to existing services are even quicker. These performance numbers are achieved at levels of between 150 and 200 orders per hour.

Benefits

- Gained real-time visibility into key systems and processes to provide insight into events and exceptions of interest
- Achieved ability to measure performance against KPIs
- Reduced fix time with automated exception management and more efficient human workflow
- Implemented agile exception resolution development
- Adopted rigorous methodology
- Achieved high component reutilization
- Standardized projects
- Accelerated learning curve on new solutions

Deployment Summary

- Vitria's M3O Operational Intelligence Suite
- Vitria's Exception Management Solution
- Vitria Enterprise Service Bus (ESB)
- Vitria BusinessWare (EAI)
- Liferay Open Source Portal
- JBoss Application Server
- Oracle 10g Enterprise Edition
- High Availability Support

Near Future

- Use Operational Intelligence to monitor and measure provisioning processes.
- Extend the use of Exception Management to other applications.
- Extend Operational Intelligence capabilities into OSS scenarios.

About Vitria

Vitria Technology, Inc. is the industry's leading Operational Intelligence company. Our innovative Operational Intelligence solutions empower customers to analyze business activities in process and take real-time action. The result is better decisions when they matter most—before opportunities have faded or problems have escalated. With a rich heritage as a pioneer of BPMS, Vitria's award-winning solutions provide the backbone for many Global 2000 companies' mission-critical business processes. Vitria has customers in North America, South America, Europe, Asia, and Australia.

VITRIA®

945 Stewart Drive, Sunnyvale, CA 94085
Tel: +1 (877) 365-5935
Spain Tel: +34-91-189-05-06
Email: moreinfo@vitria.com
www.vitria.com

© 2010 Vitria Technology, Inc. All rights reserved. Vitria, BusinessWare, M3O, Operations Book, and StreamXQuery are trademarks or registered trademarks of Vitria Technology, Inc. in the United States and other countries. All other brand or product names are trademarks or registered trademarks of their respective owners, companies, or organizations. *Andorra Telecom CS 03/10 831*